NOTES:

1. ALL DIMENSIONS ARE IN MILLIMETERS AND ELEVATIONS IN METERS.
2. FOR STEELWORK GENERAL NOTES REFER TO 23275-52-ST-0001.
3. ALL BOLTS TO BE M20 GR. 8.8 U.N.O.
4. ALL BOLTED CONNECTION WITH EXISTING MEMBERS SHALL BE SITE DRILLED U.N.O.
5. WELDED FRAME SHALL BE CPBW ON FLANGES AND 6CFW ON WEB. U.N.O.

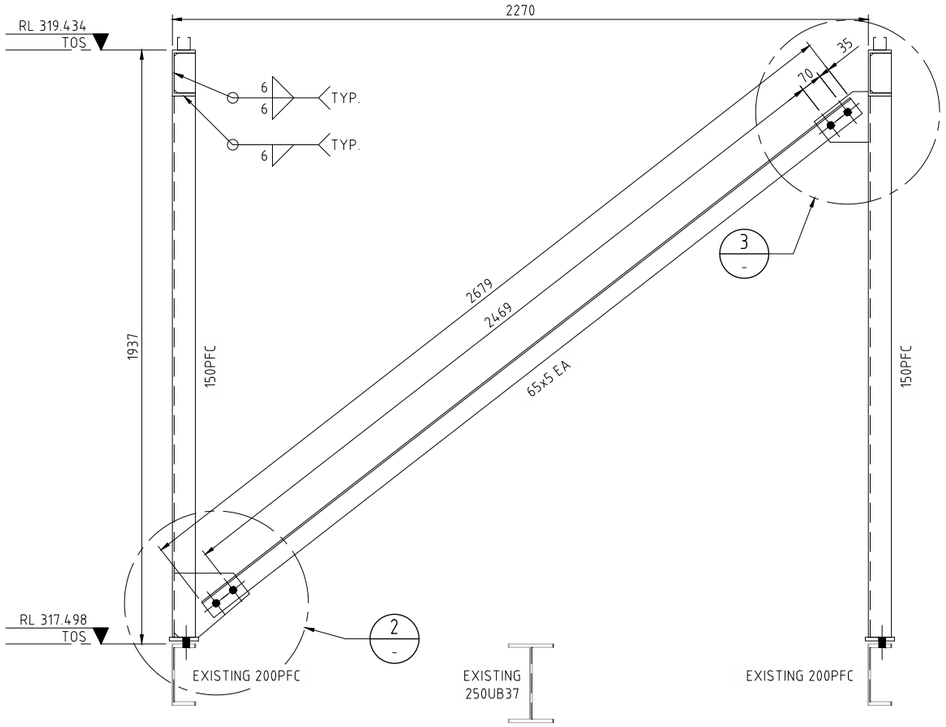

SECTION D
SCALE: 1:10 52-ST-0011

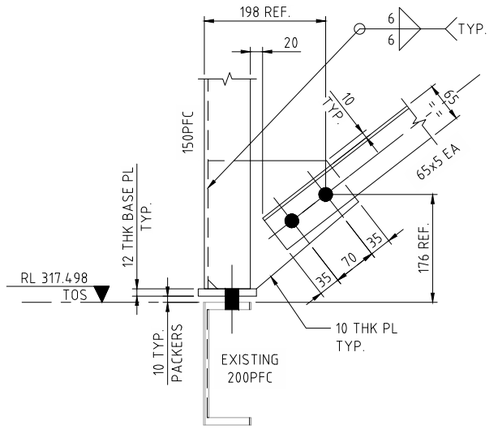

DETAIL 2
SCALE: 1:5

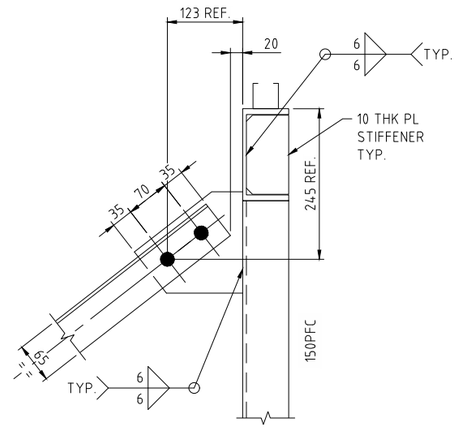

DETAIL 3
SCALE: 1:5

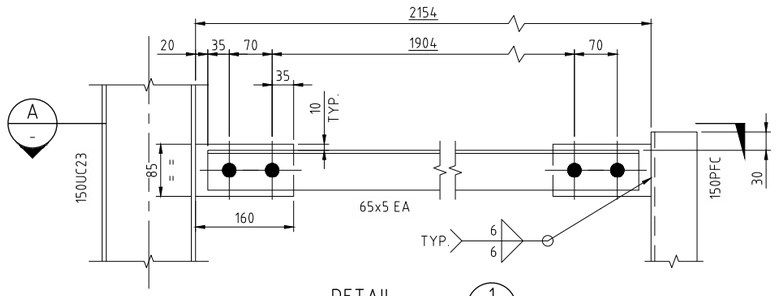

DETAIL 1
SCALE: 1:5 52-ST-0011

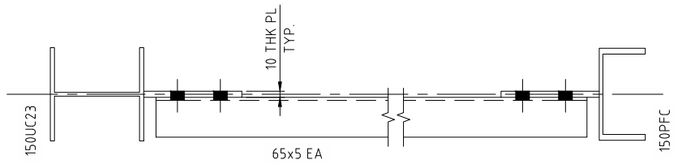

SECTION A
SCALE: 1:5

100 0 100 200 300 400 500mm
SCALE 1:5

200 0 200 400 600 800 1 000mm
SCALE 1:10

ISSUED FOR CONSTRUCTION

REFERENCE DRG'S	
23275-52-ST-0011	PIPE SUPPORTS PLAN & SECTIONS SHEET 10
23275-52-ST-0001	PIPE SUPPORTS - GENERAL ARRANGEMENTS
DRAWING	DRAWING TITLE

REVISIONS					
0	ISSUED FOR CONSTRUCTION	EM	MB	SK	23/04/24
REV	REVISION DESCRIPTION	DRAWN	CHECKED	APPROVED	DATE

APPROVALS		
DRAWN	EM	23/04/24
CHECKED	MB	23/04/24
DESIGNED	PS	23/04/24
ENG. APPROVED	SK	23/04/24
PROJ. APPROVED	LC	23/04/24
DUTY	NAME	DATE

RAVENSWOOD GOLD

DRAWINGS WHERE APPLICABLE ARE THIRD ANGLE PROJECTION

BG&E RESOURCES

RAVENSWOOD GOLD
CARBON TRANSFER SYSTEM UPGRADE
PIPE SUPPORTS
PLAN AND SECTIONS SHEET 11

SHEET	SCALE	DRAWING NUMBER	REV
A1	AS SHOWN	23275-52-ST-0012	0